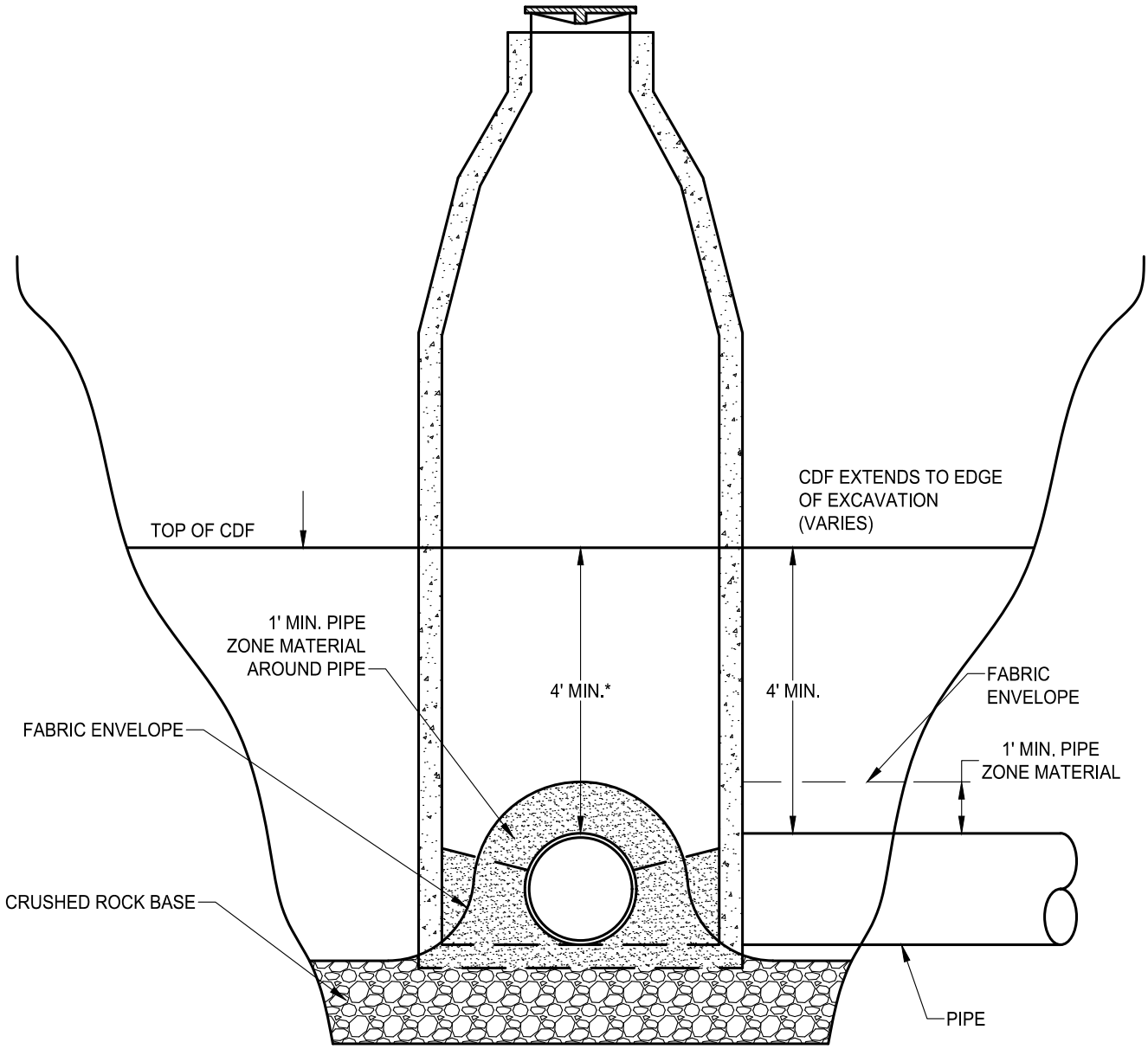

*OR THE BASE OF CONE, WHICHEVER IS LESS. FLATTOP MANHOLES, CDF TO BE PLACED NO HIGHER THAN SUBGRADE.

NOTE: SEE SECTION 50-15 FOR CDF MATERIAL SPECIFICATIONS.

DATE: 09/22/2017	NOT TO SCALE

REVISION	BY	APPROVED	DATE

CITY OF ELK GROVE - PUBLIC WORKS

MANHOLE BACKFILL DETAIL

APPROVED BY:

CITY ENGINEER — DATE: 10/24/2018

DRAWING NUMBER

ST - 8A